UNIT-II

IoT ACCESS TECHNOLOGIES

Introduction:

This unit provides an in depth look at some of access technologies that are considered for connection of smart Objects. The most promising access technologies which are going forward in the IoT marketplace are discussed. The technologies highlighted here are the ones that are seen as having market and/or mind share. The following are the technologies for connecting smart objects:

IEEE 802.15.4: This is an older but foundational wireless protocol for connecting smart objects.

IEEE 802.15.4g and IEEE 802.15.4e: These are the result of improvements done to 802.15.4 and are mainly targeted to utilities and smart cities deployments.

IEEE 1901.2a: This is a technology for connecting smart objects over power lines.

IEEE 802.11ah: This is a technology built on the well-known 802.11 Wi-Fi standards that is specifically for smart objects.

LoRaWAN: This is a scalable technology designed for longer distances with low power requirements in the unlicensed spectrum.

NB-IoT and Other LTE Variations: These technologies are often the choice of mobile service providers looking to connect smart objects over longer distances in the licensed spectrum.

A common information set is provided about the IoT access technologies which are as listed below:

- **Standardization and alliances:** The standards bodies that maintain the protocols for a technology
- **Physical layer:** The wired or wireless methods and relevant frequencies
- **MAC layer:** Considerations at the Media Access Control (MAC) layer, which bridges the physical layer with data link control
- **Topology:** The topologies supported by the technology
- **Security:** Security aspects of the technology
- **Competitive technologies:** Other technologies that are similar and may be suitable alternatives to the given technology

IEEE 802.15.4

IEEE 802.15.4 is a wireless access technology for low-cost and low-data-rate devices that are powered or run on batteries. In addition to being low cost and offering a reasonable battery life, this access technology enables easy installation using a compact protocol stack while remaining both simple and flexible. Several network communication stacks, including deterministic ones, and profiles leverage this technology to address a wide range of IoT use cases in both the consumer and business markets.

IEEE 802.15.4 is commonly found in the following types of deployments:

- Home and building automation
- Automotive networks
- Industrial wireless sensor networks
- Interactive toys and remote controls

Criticisms of IEEE 802.15.4 often focus on its MAC reliability, unbounded latency, and susceptibility to interference and multipath fading.

The negatives around reliability and latency often have to do with the Collision Sense Multiple Access/Collision Avoidance (CSMA/CA) algorithm. CSMA/CA is an access method in which a device “listens” to make sure no other devices are transmitting before starting its own transmission. If another device is transmitting, a wait time (which is usually random) occurs before “listening” occurs again. Interference and multipath fading occur with IEEE 802.15.4 because it lacks a frequency-hopping technique. Later variants of 802.15.4 from the IEEE start to address these issues.

Standardization and Alliances:

IEEE 802.15.4 or IEEE 802.15 Task Group 4 defines low-data-rate PHY and MAC layer specifications for wireless personal area networks (WPAN). This standard has evolved over the years and is a well-known solution for low-complexity wireless devices with low data rates that need many months or even years of battery.

Since 2003, the IEEE has published several iterations of the IEEE 802.15.4 specification. Newer releases
typically supersede older ones, integrate addendums, and add features or clarifications to previous versions.

The IEEE 802.15.4 PHY and MAC layers are the foundations for several networking protocol stacks. These protocol stacks make use of 802.15.4 at the physical and link layer levels, but the upper layers are different. These protocol stacks are promoted separately through various organizations and often commercialized. Some of the most well-known protocol stacks based on 802.15.4 are highlighted in Table 2-1.

S.No	Protocol	Description
1.	ZigBee	Promoted through the ZigBee alliance, ZigBee defines upper-layer components (network through application) as well as application profiles. Common profiles include building automation, home automation, and healthcare. ZigBee also defines device object functions such as device role, device discovery, network join and security
2.	6LoWPAN	6LoWPAN is an IPv6 adaptation layer defined by the IETF 6LoWPAN working group that describes how to transport IPv6 packets over IEEE 802.15.4 layers. RFCs document header compression and IPv6 enhancement to cope with the specific details of IEEE 802.15.4
3.	ZigBee IP	An evolution of the ZigBee protocol stack, ZigBee IP adopts the 6LoWPAN adaptation layer , IPv6 network layer, RPL routing protocol. In addition, it offers improvement in IP security.
4.	ISA100.11a	This is developed by the International Society of Automation (ISA) as "Wireless Systems for Industrial automation: Process Control and Related Applications".It is based on IEEE 802.15.4-2006. The network and transport layers are based on IETF 6LoWPAN, IPv6, and UDP standards
5.	Wireless HART	Wireless HART promoted by the HART Communication Foundation, is a protocol stack that offers a time-synchronized, self-organizing, and self healing mesh architecture, leveraging IEEE 802.15.4-2006 over the 2.4GHz frequency band.
6.	Thread	Constructed on top of IETF 6LoWPAN /IPv6, Thread is a protocol stack for a secure and reliable mesh network to connect and control products in the home.

ZigBee

ZigBee is one of the most well-known protocols listed in Table 4-2. In addition, ZigBee has continued to evolve over time as evidenced by the release of Zigbee IP and is representative of how IEEE 802.15.4 can be leveraged at the PHY and MAC layers, independent of the protocol layers above. The Zigbee Alliance is an industry group formed to certify interoperability between vendors and it is committed to driving and evolving ZigBee as an IoT solution for interconnecting smart objects. ZigBee solutions are aimed at smart objects and sensors that have low bandwidth and low power needs.

Furthermore, products that are ZigBee compliant and certified by the ZigBee Alliance should interoperate even though different vendors may manufacture them. The ZigBee specification has undergone several revisions.

The main areas where ZigBee is the most well-known include automation for commercial, retail, and home applications and smart energy. In the industrial and commercial automation space, ZigBee-based devices can handle various functions, from measuring temperature and humidity to tracking assets. For home automation, ZigBee can control lighting, thermostats, and security functions. ZigBee Smart Energy brings together a variety of interoperable products, such as smart meters, that can monitor and control the use and delivery of utilities, such as electricity and water. These ZigBee products are controlled by

the utility provider and can help coordinate usage between homes and businesses and the utility provider itself to provide more efficient operations.
The traditional ZigBee stack is illustrated in Figure 2.1. As mentioned previously, ZigBee utilizes the IEEE
802.15.4 Standard at the lower PHY and MAC layers. ZigBee specifies the network and security layer and application support layer that sit on top of the lower layers.

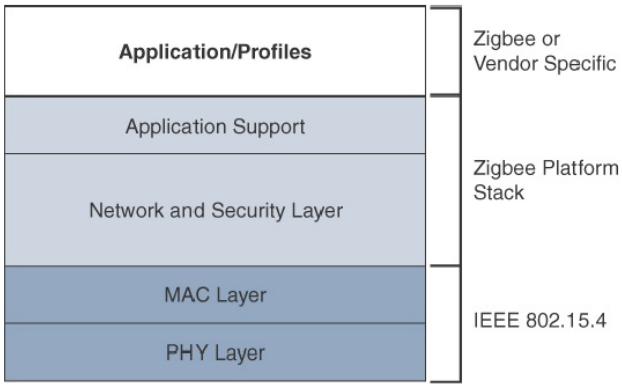

Figure 2.1 High Level ZigBee Protocol Stack

The ZigBee network and security layer provides mechanisms for network startup, configuration, routing, and securing communications. This includes calculating routing paths in what is often a changing topology, discovering neighbors, and managing the routing tables as devices join for the first time. The network layer is also responsible for forming the appropriate topology, which is often a mesh but could be a star or tree as well. From a security perspective, ZigBee utilizes 802.15.4 for security at the MAC layer, using the Advanced Encryption Standard (AES) with a 128-bit key and also provides security at the network and application layers.

The application support layer in Figure 2.1 interfaces the lower portion of the stack dealing with the networking of ZigBee devices with the higher-layer applications. ZigBee predefines many application profiles for certain industries, and vendors can optionally create their own custom ones at this layer.

ZigBee is one of the most well-known protocols built on an IEEE 802.15.4 foundation. On top of the 802.15.4 PHY and MAC layers, ZigBee specifies its own network and security layer and application profiles. While this structure has provided a fair degree of interoperability for vendors with membership in the ZigBee Alliance, it has not provided interoperability with other IoT solutions. However, this has started to change with the release of ZigBee IP

ZigBee IP

With the introduction of ZigBee IP, the support of IEEE 802.15.4 continues, but the IP and TCP/UDP protocols and various other open standards are now supported at the network and transport layers. The ZigBee-specific layers are now found only at the top of the protocol stack for the applications. ZigBee IP was created to embrace the open standards coming from the IETF's work on LLNs, such as IPv6, 6LoWPAN, and RPL. They

provide for low-bandwidth, low-power, and cost-effective communications when connecting smart objects.

ZigBee IP is a critical part of the Smart Energy (SE) Profile 2.0 specification from the ZigBee Alliance. SE 2.0 is aimed at smart metering and residential energy management systems. In fact, ZigBee IP was designed specifically for SE 2.0 but it is not limited to this use case. Any other applications that need a standards based IoT stack can utilize Zigbee IP. The ZigBee IP stack is shown in Figure 2.2

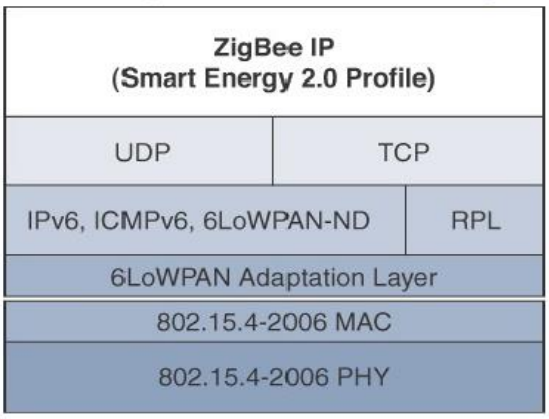

Figure 2.2 ZigBee IP protocol stack

Unlike traditional ZigBee, ZigBee IP supports 6LoWPAN as an adaptation layer. The 6LoWPAN mesh addressing header is not required as ZigBee IP utilizes the mesh-over or route-over method for forwarding packets.

ZigBee IP requires the support of 6LoWPAN's fragmentation and header compression schemes. At the network layer, all ZigBee IP nodes support IPv6, ICMPv6, and 6LoWPAN Neighbor Discovery (ND), and utilize RPL for the routing of packets across the mesh network. Both TCP and UDP are also supported, to provide both connection-oriented and connectionless service.

As you can see, ZigBee IP is a compelling protocol stack offering because it is based on current IoT standards at every layer under the application layer. This opens up opportunities for ZigBee IP to integrate and interoperate on just about any 802.15.4 network with other solutions built on these open IoT standards.

Physical Layer

The 802.15.4 standard supports an extensive number of PHY options that range from 2.4 GHz to sub-GHz frequencies in ISM bands. The original IEEE 802.15.4-2003 standard specified only three PHY options based on direct sequence spread spectrum (DSSS) modulation. DSSS is a modulation technique in which a signal is intentionally spread in the frequency domain, resulting in greater bandwidth. The original physical layer transmission options were as follows:

- 2.4 GHz, 16 channels, with a data rate of 250 kbps
- 915 MHz, 10 channels, with a data rate of 40 kbps
- 868 MHz, 1 channel, with a data rate of 20 kbps

The 2.4 GHz band operates worldwide. The 915 MHz band operates mainly in North and South America, and the 868 MHz frequencies are used in Europe, the Middle East, and Africa. IEEE 802.15.4-2006, 802.15.4-2011, and IEEE 802.15.4-2015 introduced additional PHY communication options, including the following:

- **OQPSK PHY:** This is DSSS PHY, employing offset quadrature phase-shift keying (OQPSK) modulation. OQPSK is a modulation technique that uses four unique bit values that are signaled by phase changes. An offset function that is present during phase shifts allows data to be transmitted more reliably.
- **BPSK PHY:** This is DSSS PHY, employing binary phase-shift keying (BPSK) modulation. BPSK specifies two unique phase shifts as its data encoding scheme.
- **ASK PHY:** This is parallel sequence spread spectrum (PSSS) PHY, employing amplitude shift keying (ASK) and BPSK modulation. PSSS is an advanced encoding scheme that offers increased range, throughput, data rates, and signal integrity compared to DSSS. ASK uses amplitude shifts instead of phase shifts to signal different bit values.

These improvements increase the maximum data rate for both 868 MHz and 915 MHz to 100 kbps and 250 kbps, respectively. The 868 MHz support was enhanced to 3 channels, while other IEEE 802.15.4 study groups produced addendums for new frequency bands. For example, the IEEE 802.15.4c study group created the bands 314–316 MHz, 430–434 MHz, and 779–787 MHz for use in China.

Figure 2.3 shows the frame for the 802.15.4 physical layer. The synchronization header for this frame is composed of the Preamble and the Start of Frame Delimiter fields. The Preamble field is a 32-bit 4-byte (for parallel construction) pattern that identifies the start of the frame and is used to synchronize the data transmission. The Start of Frame Delimiter field informs the receiver that frame contents start immediately after this byte.

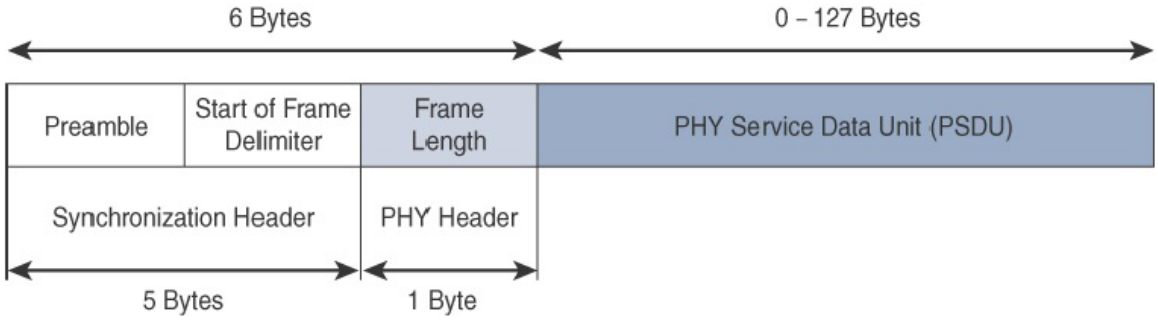

Figure 2.3 IEEE 802.15.4 PHY Format

The PHY Header portion of the PHY frame shown in Figure 2.3 is simply a frame length value. It lets the receiver know how much total data to expect in the PHY service data unit (PSDU) portion of the 802.4.15 PHY. The PSDU is the data field or payload.

MAC Layer

The IEEE 802.15.4 MAC layer manages access to the PHY channel by defining how devices in the same area will share the frequencies allocated. At this layer, the scheduling and routing of data frames are also coordinated. The 802.15.4 MAC layer performs the following tasks:

- Network beaconing for devices acting as coordinators (New devices use beacons to join an 802.15.4 network)

- PAN association and disassociation by a device
- Device security
- Reliable link communications between two peer MAC entities

The MAC layer achieves these tasks by using various predefined frame types. In fact, four types of MAC frames are specified in 802.15.4:

- **Data frame:** Handles all transfers of data
- **Beacon frame:** Used in the transmission of beacons from a PAN coordinator
- **Acknowledgement frame:** Confirms the successful reception of a frame
- **MAC command frame:** Responsible for control communication between devices

Each of these four 802.15.4 MAC frame types follows the frame format shown in Figure 2.4. In Figure 2.4, notice that the MAC frame is carried as the PHY payload. The 802.15.4 MAC frame can be broken down into the MAC Header, MAC Payload, and MAC Footer fields.

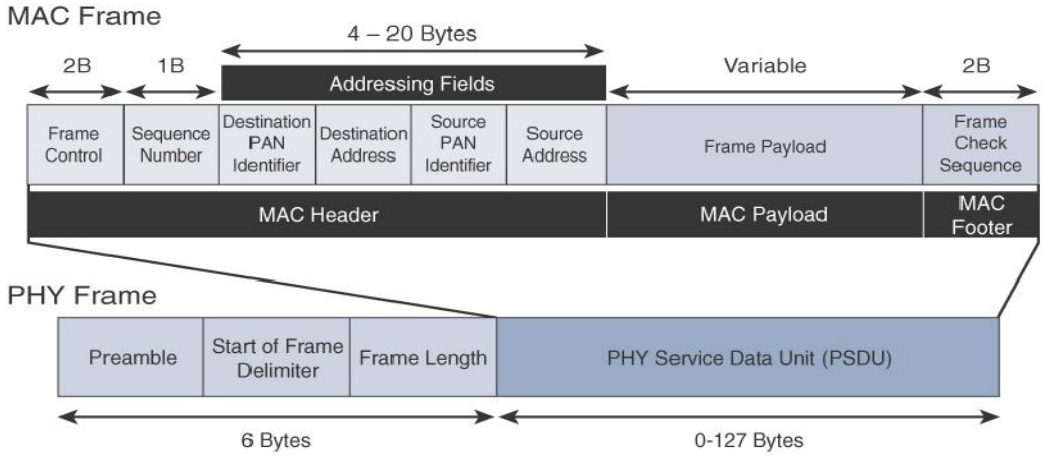

Figure 2.4 IEEE 802.15.4 MAC Format

The MAC Header field is composed of the Frame Control, Sequence Number and the Addressing fields. The Frame Control field defines attributes such as frame type, addressing modes, and other control flags. The Sequence Number field indicates the sequence identifier for the frame. The Addressing field specifies the Source and Destination PAN Identifier fields as well as the Source and Destination Address fields.

The MAC Payload field varies by individual frame type. For example, beacon frames have specific fields and payloads related to beacons, while MAC command frames have different fields present. The MAC Footer field is nothing more than a frame check sequence (FCS). An FCS is a calculation based on the data in the frame that is used by the receiving side to confirm the integrity of the data in the frame.

IEEE 802.15.4 requires all devices to support a unique 64-bit extended MAC address, based on EUI-64. However, because the maximum payload is 127 bytes, 802.15.4 also defines how a 16-bit “short address” is assigned to devices.

This short address is local to the PAN and substantially reduces the frame overhead compared to a 64-bit extended MAC address. However, you should be aware that the use of this short address might be limited to specific upper-layer protocol stacks.

Topology

IEEE 802.15.4–based networks can be built as star, peer-to-peer, or mesh topologies. Mesh networks tie together many nodes. This allows nodes that would be out of range if trying to communicate directly to leverage intermediary nodes to transfer communications. Please note that every 802.15.4 PAN should be set up with a unique ID. All the nodes in the same 802.15.4 network should use the same PAN ID. Figure 2.5 shows an example of an 802.15.4 mesh network with a PAN ID of 1.

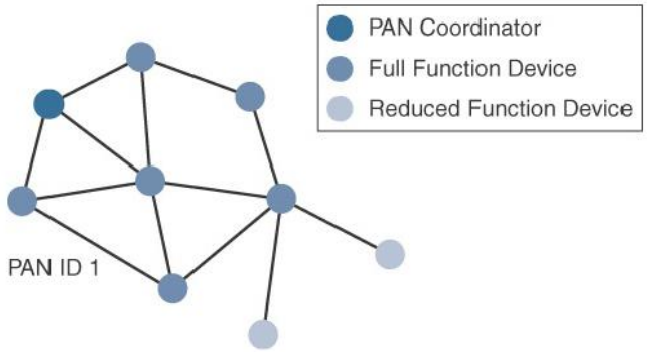

Figure 2.5: Sample Mesh Network Topology

A minimum of one FFD acting as a PAN coordinator is required to deliver services that allow other devices to associate and form a cell or PAN. Notice in Figure 2.5 that a single PAN coordinator is identified for PAN ID 1. FFD devices can communicate with any other devices, whereas RFD devices can communicate only with FFD devices.

The IEEE 802.15.4 specification does not define a path selection within the MAC layer for a mesh topology. This function can be done at Layer 2 and is known as *mesh-under*. Generally, this is based on a proprietary solution. Alternatively, the routing function can occur at Layer 3, using a routing protocol, such as the IPv6 Routing Protocol for Low Power and Lossy Networks (RPL). This is referred to as *mesh-over*.

Security

The IEEE 802.15.4 specification uses Advanced Encryption Standard (AES) with a 128-bit key length as the base encryption algorithm for securing its data. Established by the US National Institute of Standards and Technology in 2001, AES is a block cipher, which means it operates on fixed-size blocks of data. The use of AES by the US government and its widespread adoption in the private sector has helped it become one of the most popular algorithms used in symmetric key cryptography. (A *symmetric key* means that the same key is used for both the encryption and decryption of the data.)

In addition to encrypting the data, AES in 802.15.4 also validates the data that is sent. This is accomplished by a message integrity code (MIC), which is calculated for the entire frame using the same AES key that is used for encryption.

Enabling these security features for 802.15.4 changes the frame format slightly and consumes some of the payload. Using the Security Enabled field in the Frame Control portion of the 802.15.4 header is the first step to enabling AES encryption. This field is a single bit that is set to 1 for security. Once this bit is set, a field called the Auxiliary Security Header is created after the Source Address field, by stealing some bytes from the Payload field. Figure 2.6 shows the IEEE 802.15.4 frame format at a high level, with the Security Enabled bit set and the Auxiliary Security Header field present.

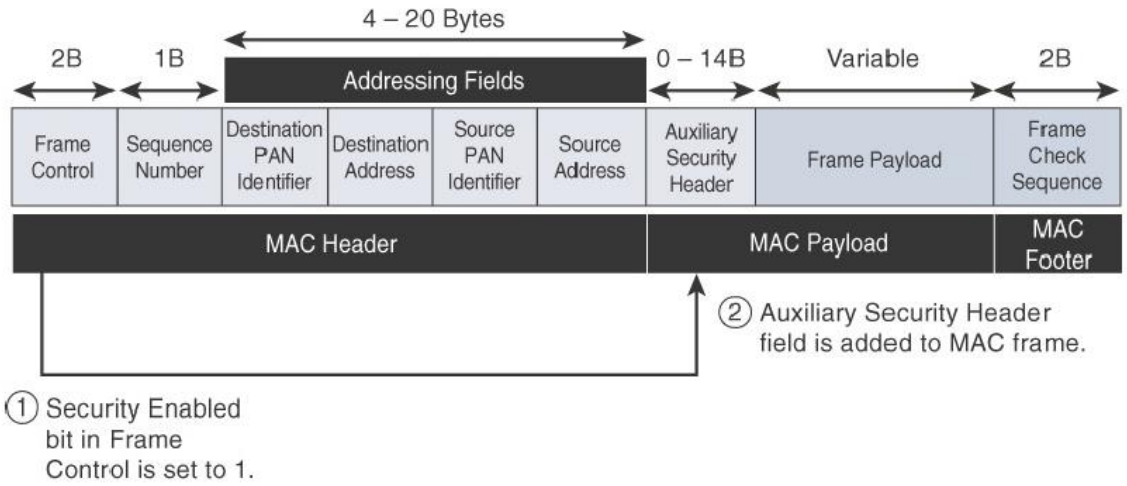

Figure 2.6: Frame format with the Auxiliary Security Header Field for 802.15.4-2006

Competitive Technologies

As detailed in Table 2.1, the IEEE 802.15.4 PHY and MAC layers are the foundations for several networking profiles that compete against each other in various IoT access environments. These various vendors and organizations build upper-layer protocol stacks on top of an 802.15.4 core. They compete and distinguish themselves based on features and capabilities in these upper layers.

A competitive radio technology that is different in its PHY and MAC layers is DASH7. DASH7 was originally based on the ISO18000-7 standard and positioned for industrial communications, whereas IEEE 802.15.4 is more generic. Commonly employed in active radio frequency identification (RFID) implementations, DASH7 was used by US military forces for many years, mainly for logistics purposes. Active RFID utilizes radio waves generated by a battery-powered tag on an object to enable continuous tracking.

The current DASH7 technology offers low power consumption, a compact protocol stack, range up to 1 mile, and AES encryption. Frequencies of 433 MHz, 868 MHz, and 915 MHz have been defined, enabling data rates up to 166.667 kbps and a maximum payload of 256 bytes. DASH7 is promoted by the DASH7 Alliance, which has evolved the protocol from its active RFID niche into a wireless sensor network technology that is aimed at the commercial market.

IEEE 802.15.4 Summary

The IEEE 802.15.4 wireless PHY and MAC layers are mature specifications that are the foundation for various industry standards and products as listed in Table 2.1. The PHY layer offers a maximum speed of up to 250 kbps, but this varies based on modulation and frequency. The MAC layer for 802.15.4 is robust and handles how data is transmitted and received over the PHY layer. Specifically, the MAC layer handles the association and disassociation of devices to/from a PAN, reliable communications between devices, security, and the formation of various topologies.

The topologies used in 802.15.4 include star, peer-to-peer, and cluster trees that allow for the formation of mesh networks. From a security perspective, 802.15.4 utilizes AES encryption to allow secure communications and also provide data integrity.

The main competitor to IEEE 802.15.4 is DASH7, another wireless technology that compares favorably. However, IEEE 802.15.4 has an edge in the marketplace through all the different vendors and organizations that utilize its PHY and MAC layers. As 802.15.4 continues to evolve, you will likely see broader adoption of the IPv6 standard at the network layer. For IoT sensor deployments requiring low power, low data rate, and low complexity, the IEEE 802.15.4 standard deserves strong consideration.

IEEE 802.11ah

In unconstrained networks, IEEE 802.11 Wi-Fi is certainly the most successfully deployed wireless technology. This standard is a key IoT wireless access technology, either for connecting endpoints such as fog computing nodes, high-data-rate sensors, and audio or video analytics devices or for deploying Wi-Fi backhaul infrastructures, such as outdoor Wi-Fi mesh in smart cities, oil and mining, or other environments.

However, Wi-Fi lacks sub-GHz support for better signal penetration, low power for battery-powered nodes, and the ability to support a large number of devices. For these reasons, the IEEE 802.11 working group launched a task group named IEEE 802.11ah to specify a sub-GHz version of Wi-Fi. Three main use cases are identified for IEEE 802.11ah:

- **Sensors and meters covering a smart grid:** Meter to pole, environmental/agricultural monitoring, industrial process sensors, indoor healthcare system and fitness sensors, home and building automation sensors
- **Backhaul aggregation of industrial sensors and meter data:** Potentially connecting IEEE 802.15.4g sub networks
- **Extended range Wi-Fi:** For outdoor extended-range hotspot or cellular traffic offloading when distances already covered by IEEE 802.11a/b/g/n/ac are not good enough

Standardization and Alliances

In July 2010, the IEEE 802.11 working group decided to work on an “industrial Wi-Fi” and created the IEEE 802.11ah group. The 802.11ah specification would operate in unlicensed sub-GHz frequency bands, similar to IEEE 802.15.4 and other LPWA technologies.

The industry organization that promotes Wi-Fi certifications and interoperability for 2.4 GHz and 5 GHz products is the Wi-Fi Alliance. The Wi-Fi Alliance is a similar body to the Wi-SUN Alliance.

For the 802.11ah standard, the Wi-Fi Alliance defined a new brand called Wi-Fi HaLow. The HaLow brand exclusively covers IEEE 802.11ah for sub-GHz device certification. You can think of Wi-Fi HaLow as a commercial designation for products incorporating IEEE 802.11ah technology.

Physical Layer

IEEE 802.11ah essentially provides an additional 802.11 physical layer operating in unlicensed sub-GHz
bands.

For example, various countries and regions use the following bands for IEEE 802.11ah: 868–868.6 MHz for EMEAR, 902–928 MHz and associated subsets for North America and Asia-Pacific regions, and 314–316 MHz, 430–434 MHz, 470–510 MHz, and 779–787 MHz for China.

Based on OFDM modulation, IEEE 802.11ah uses channels of 2, 4, 8, or 16 MHz (and also 1 MHz for lowbandwidth transmission). This is one-tenth of the IEEE 802.11ac channels, resulting in one-tenth of the corresponding data rates of IEEE 802.11ac. The IEEE 802.11ac standard is a high-speed wireless LAN protocol at the 5 GHz band that is capable of speeds up to 1 Gbps.

While 802.11ah does not approach this transmission speed (as it uses one-tenth of 802.11ac channel width, it reaches one-tenth of 802.11ac speed), it does provide an extended range for its lower speed data. For example, at a data rate of 100 kbps, the outdoor transmission range for IEEE 802.11ah is expected to be 0.62 mile.

MAC Layer

The IEEE 802.11ah MAC layer is optimized to support the new sub-GHz Wi-Fi PHY while providing low power consumption and the ability to support a larger number of endpoints. Enhancements and features specified by IEEE 802.11ah for the MAC layer include the following:

- **Number of devices:** Has been scaled up to 8192 per access point.
- **MAC header:** Has been shortened to allow more efficient communication.
- **Null data packet (NDP) support:** Is extended to cover several control and management frames. Relevant information is concentrated in the PHY header and the additional overhead associated with decoding the MAC header and data payload is avoided. This change makes the control frame exchanges efficient and less power-consuming for the receiving stations.
- **Grouping and sectorization:** Enables an AP to use sector antennas and also group stations (distributing a group ID). In combination with RAW and TWT, this mechanism reduces contention in large cells with many clients by restricting which group, in which sector, can contend during which time window. (Sectors are described in more detail in the following section.)
- **Restricted access window (RAW):** Is a control algorithm that avoids simultaneous transmissions when many devices are present and provides fair access to the wireless network. By providing moreefficient access to the medium, additional power savings for battery-powered devices can be achieved, and collisions are reduced.
- **Target wake time (TWT):** Reduces energy consumption by permitting an access point to define times when a device can access the network. This allows devices to enter a low-power state until their TWT time arrives. It also reduces the probability of collisions in large cells with many clients.
- **Speed frame exchange:** Enables an AP and endpoint to exchange frames during a reserved transmit opportunity (TXOP). This reduces contention on the medium, minimizes the number of frame exchanges to improve channel efficiency, and extends battery life by keeping awake times short.

The 802.11ah MAC layer is focused on power consumption and mechanisms to allow low-power Wi-Fi stations to wake up less often and operate more efficiently. This sort of MAC layer is ideal for IoT devices that often produce short, low-bit-rate transmissions.

Topology

While IEEE 802.11ah is deployed as a star topology, it includes a simple hops relay operation to extend its range. This relay option is not capped, but the IEEE 802.11ah task group worked on the assumption of two hops. It allows one 802.11ah device to act as an intermediary and relay data to another. In some ways, this is similar to a mesh, and it is important to note that the clients and not the access point handle the relay function.

This relay operation can be combined with a higher transmission rate or modulation and coding scheme (MCS). This means that a higher transmit rate is used by relay devices talking directly to the access point. The transmit rate reduces as you move further from the access point via relay clients. This ensures an efficient system that limits transmission speeds at the edge of the relays so that communications close to the AP are not negatively affected.

Sectorization is a technique that involves partitioning the coverage area into several sectors to get reduced contention within a certain sector. This technique is useful for limiting collisions in cells that have many clients. This technique is also often necessary when the coverage area of 802.11ah access points is large, and interference from neighboring access points is problematic. Sectorization uses an antenna array and beam-forming techniques to partition the cell-coverage area. Figure 2.7 shows an example of 802.11ah sectorization.

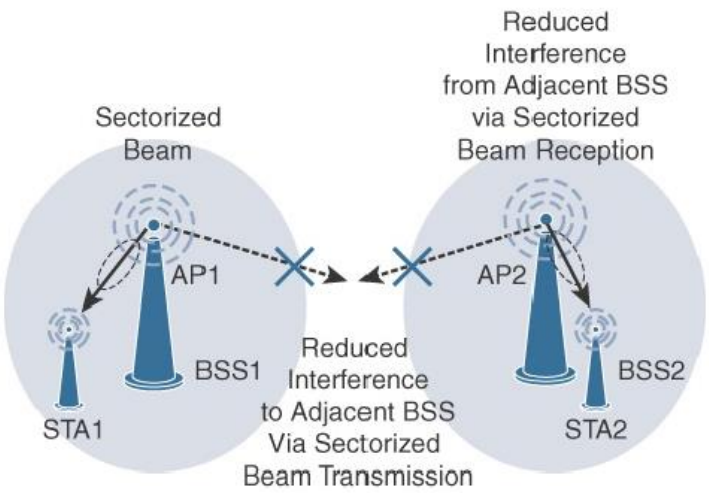

Figure 2.7: IEEE 802.11 ah Sectorization

Security

No additional security has been identified for IEEE 802.11ah compared to other IEEE 802.11 specifications.

Competitive Technologies

Competitive technologies to IEEE 802.11ah are IEEE 802.15.4 and IEEE 802.15.4e.

IEEE 802.11ah Conclusions

The IEEE 802.11ah access technology is an ongoing effort of the IEEE 802.11 working group to define an “industrial Wi-Fi.” Currently, this standard is just at the beginning of its evolution, and it is not clear how the market will react to this new Wi-Fi standard.

This specification offers a longer range than traditional Wi-Fi technologies and provides good support for low-power devices that need to send smaller bursts of data at lower speeds. At the same time, it has the ability to scale to higher speeds as well.

IEEE 802.11ah is quite different in terms of current products and the existing Wi-Fi technologies in the 2.4 GHz and 5 GHz frequency bands. To gain broad adoption and compete against similar technologies in this space, it will need an ecosystem of products and solutions that can be configured and deployed at a low cost.

LoRaWAN

In recent years, a new set of wireless technologies known as Low-Power Wide-Area (LPWA) has received a lot of attention from the industry and press. Particularly well adapted for long-range and battery-powered endpoints, LPWA technologies open new business opportunities to both services providers and enterprises considering IoT solutions. LoRaWAN is an unlicensed-band LPWA technology.

Standardization and Alliances

Initially, LoRa was a physical layer, or Layer 1, modulation that was developed by a French company named Cycleo. Later, Cycleo was acquired by Semtech. Optimized for long-range, two-way communications and low power consumption, the technology evolved from Layer 1 to a broader scope through the creation of the LoRa Alliance.

Semtech LoRa as a Layer 1 PHY modulation technology is available through multiple chipset vendors. To differentiate from the physical layer modulation known as LoRa, the LoRa Alliance uses the term LoRaWAN to refer to its architecture and its specifications that describe end-to-end LoRaWAN communications and protocols.

Figure 2.8 provides a high-level overview of the LoRaWAN layers. In this figure, notice that Semtech is responsible for the PHY layer, while the LoRa Alliance handles the MAC layer and regional frequency bands.

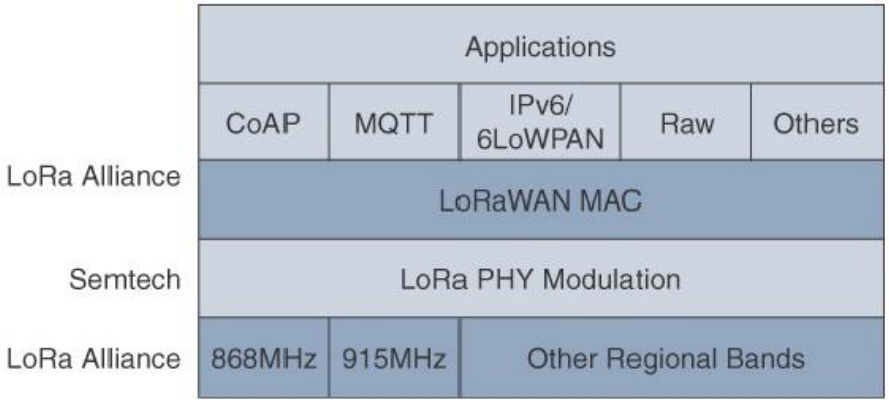

Figure 2.8 LoRa WAN Layers

Physical Layer

Semtech LoRa modulation is based on chirp spread spectrum modulation, which trades a lower data rate for receiver sensitivity to significantly increase the communication distance. In addition, it allows demodulation below the noise floor, offers robustness to noise and interference, and manages a single channel occupation by different spreading factors. This enables LoRa devices to receive on multiple channels in parallel.

LoRaWAN 1.0.2 regional specifications describe the use of the main unlicensed sub-GHz frequency bands of 433 MHz, 779–787 MHz, 863–870 MHz, and 902–928 MHz, as well as regional profiles for a subset of the 902–928 MHz bandwidth. For example, Australia utilizes 915–928 MHz frequency bands, while South Korea uses 920–923 MHz and Japan uses 920–928 MHz

Understanding LoRa gateways is critical to understanding a LoRaWAN system. A LoRa gateway is deployed as the center hub of star network architecture. It uses multiple transceivers and channels and can demodulate multiple channels at once or even demodulate multiple signals on the same channel simultaneously. LoRa gateways serve as a transparent bridge relaying data between endpoints, and the endpoints use a single-hop wireless connection to communicate with one or many gateways.

The data rate in LoRaWAN varies depending on the frequency bands and adaptive data rate (ADR). ADR is an algorithm that manages the data rate and radio signal for each endpoint. The ADR algorithm ensures that packets are delivered at the best data rate possible and that network performance is both optimal and scalable. Endpoints close to the gateways with good signal values transmit with the highest data rate, which enables a shorter transmission time over the wireless network, and the lowest transmit power. Meanwhile, endpoints at the edge of the link budget communicate at the lowest data rate and highest transmit power.

An important feature of LoRa is its ability to handle various data rates via the spreading factor. Devices with a low spreading factor (SF) achieve less distance in their communications but transmit at faster speeds, resulting in less airtime. A higher SF provides slower transmission rates but achieves a higher reliability at longer distances. Table 2.2 illustrates how LoRaWAN data rates can vary depending on the associated spreading factor for the two main frequency bands, 863–870 MHz and 902–928 MHz.

Table 2.2 LoRa WAN Data Rate example

Configuration	863–870 MHz bps	902–928 MHz bps
LoRa: SF12/125 kHz	250	N/A
LoRa: SF11/125 kHz	440	N/A
LoRa: SF10/125 kHz	980	980
LoRa: SF9/125 kHz	1760	1760
LoRa: SF8/125 kHz	3125	3125
LoRa: SF7/125 kHz	5470	5470
LoRa: SF7/250 kHz	11,000	N/A
FSK: 50 kbps	50,000	N/A
LoRa: SF12/500 kHz	N/A	980
LoRa: SF11/500 kHz	N/A	1760
LoRa: SF10/500 kHz	N/A	3900
LoRa: SF9/500 kHz	N/A	7000
LoRa: SF8/500 kHz	N/A	12,500
LoRa: SF7/500 kHz	N/A	21,900

In Table 2.2, notice the relationship between SF and data rate. For example, at an SF value of 12 for 125 kHz of channel bandwidth, the data rate is 250 bps. However, when the SF is decreased to a value of 7, the data rate increases to 5470 bps. Channel bandwidth values of 125 kHz, 250 kHz, and 500 kHz are also evident in Table 2.2. The effect of increasing the bandwidth is that faster data rates can be achieved for the same spreading factor.

MAC Layer

The MAC layer is defined in the LoRaWAN specification. This layer takes advantage of the LoRa physical layer and classifies LoRaWAN endpoints to optimize their battery life and ensure downstream communications to the LoRaWAN endpoints. The LoRaWAN specification documents three classes of LoRaWAN devices:

- **Class A:** This class is the default implementation. Optimized for battery-powered nodes, it allows bidirectional communications, where a given node is able to receive downstream traffic after transmitting. Two receive windows are available after each transmission.
- **Class B:** This class was designated “experimental” in LoRaWAN 1.0.1 until it can be better defined. A Class B node or endpoint should get additional receive windows compared to Class A, but gateways must be synchronized through a beaconing process.
- **Class C:** This class is particularly adapted for powered nodes. This classification enables a node to be continuously listening by keeping it’s receive window open when not transmitting.

LoRaWAN messages, either uplink or downlink, have a PHY payload composed of a 1-byte MAC header, a variable-byte MAC payload, and a MIC that is 4 bytes in length. The MAC payload size depends on the frequency band and the data rate, ranging from 59 to 230

bytes for the 863–870 MHz band and 19 to 250 bytes for the 902–928 MHz band. Figure 2.9 shows a high-level LoRaWAN MAC frame format.

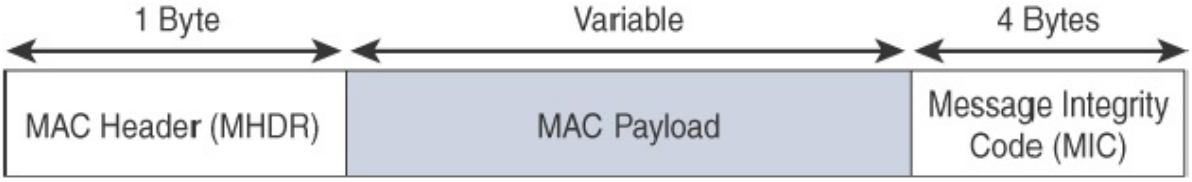

Figure 2.9 High- Level LoRaWAN MAC Frame Format

In version 1.0.x, LoRaWAN utilizes six MAC message types. LoRaWAN devices use join request and join accept messages for over-the-air (OTA) activation and joining the network. The other message types are unconfirmed data up/down and confirmed data up/down. A “confirmed” message is one that must be acknowledged, and “unconfirmed” signifies that the end device does not need to acknowledge.

“up/down” is simply a directional notation identifying whether the message flows in the uplink or downlink path. Uplink messages are sent from endpoints to the network server and are relayed by one or more LoRaWAN gateways. Downlink messages flow from the network server to a single endpoint and are relayed by only a single gateway. Multicast over LoRaWAN is being considered for future versions.

LoRaWAN endpoints are uniquely addressable through a variety of methods, including the following:

- An endpoint can have a global end device ID or DevEUI represented as an IEEE EUI-64 address.
- An endpoint can have a global application ID or AppEUI represented as an IEEE EUI-64 address that uniquely identifies the application provider, such as the owner, of the end device.
- In a LoRaWAN network, endpoints are also known by their end device address, known as a DevAddr, a 32-bit address. The 7 most significant bits are the network identifier (NwkID), which identifies the LoRaWAN network. The 25 least significant bits are used as the network address (NwkAddr) to identify the endpoint in the network.

Topology

LoRaWAN topology is often described as a “star of stars” topology. As shown in Figure 2.10, the infrastructure consists of endpoints exchanging packets through gateways acting as bridges, with a central LoRaWAN network server. Gateways connect to the backend network using standard IP connections, and endpoints communicate directly with one or more gateways.

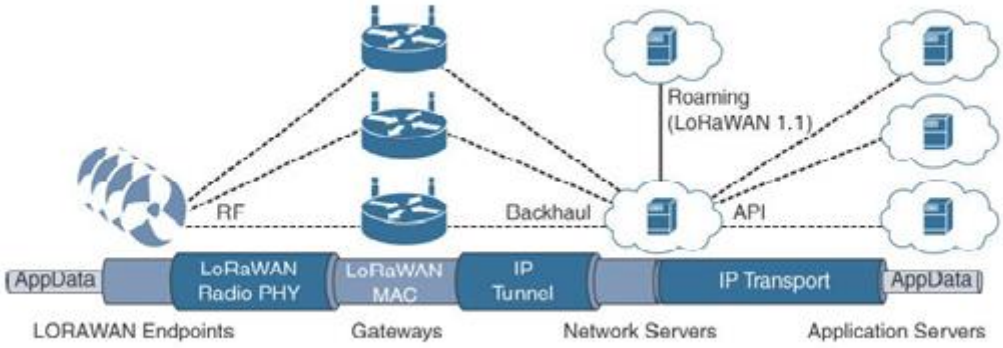

Figure 2.10 LoRa WAN Architecture

In Figure 2.10, LoRaWAN endpoints transport their selected application data over the LoRaWAN MAC layer on top of one of the supported PHY layer frequency bands. The application data is contained in upper protocol layers. These upper layers are not the responsibility of the LoRa Alliance, but best practices may be developed and recommended. These upper layers could just be raw data on top of the LoRaWAN MAC layer, or the data could be stacked in multiple protocols. For example, you could have upper-layer protocols, such as ZigBee Control Layer (ZCL), Constrained Application Protocol (CoAP), or Message Queuing Telemetry Transport (MQTT), with or without an IPv6/6LoWPAN layer.

Figure 2.10 also shows how LoRaWAN gateways act as bridges that relay between endpoints and the network servers. Multiple gateways can receive and transport the same packets. When duplicate packets are received, de-duplication is a function of the network server.

The LoRaWAN network server manages the data rate and radio frequency (RF) of each endpoint through the adaptive data rate (ADR) algorithm. ADR is a key component of the network scalability, performance, and battery life of the endpoints. The LoRaWAN network server forwards application data to the application servers, as depicted in Figure 2.10.

In future versions of the LoRaWAN specification, roaming capabilities between LoRaWAN network servers will be added. These capabilities will enable mobile endpoints to connect and roam between different LoRaWAN network infrastructures.

Security

Security in a LoRaWAN deployment applies to different components of the architecture, as detailed in Figure 2.11. LoRaWAN endpoints must implement two layers of security, protecting communications and data privacy across the network.

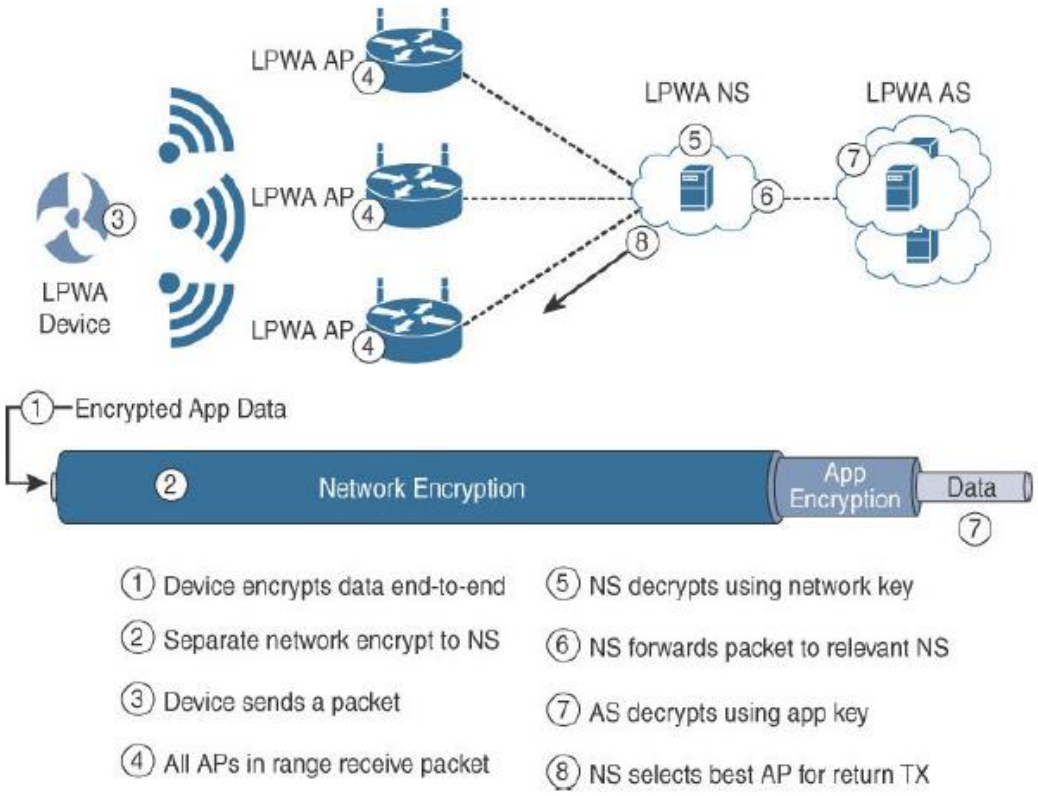

Figure 2.11 LoRaWAN Security

- ✓ The first layer, called "network security" but applied at the MAC layer, guarantees the authentication of the endpoints by the LoRaWAN network server. Also, it protects LoRaWAN packets by performing encryption based on AES. Each endpoint implements a network session key (NwkSKey), used by both itself and the LoRaWAN network server. The NwkSKey ensures data integrity through computing and checking the MIC of every data message as well as encrypting and decrypting MAC-only data message payloads.
- ✓ The second layer is an application session key (AppSKey), which performs encryption and decryption functions between the endpoint and its application server. Furthermore, it computes and checks the application-level MIC, if included. This ensures that the LoRaWAN service provider does not have access to the application payload if it is not allowed that access. Endpoints receive their AES-128 application key (AppKey) from the application owner. This key is most likely derived from an application-specific root key exclusively known to and under the control of the application provider.

For production deployments, it is expected that the LoRaWAN gateways are protected as well, for both the LoRaWAN traffic and the network management and operations over their backhaul link(s). This can be done using traditional VPN and IPSec technologies that demonstrate scaling in traditional IT deployments.

Additional security add-ons are under evaluation by the LoRaWAN Alliance for future revisions of the specification. LoRaWAN endpoints attached to a LoRaWAN network must get registered and authenticated. This can be achieved through one of the two join mechanisms:

- **Activation by personalization (ABP):** Endpoints don't need to run a join procedure as their individual details, including DevAddr and the NwkSKey and AppSKey session keys, are preconfigured and stored in the end device. This same information is registered in the LoRaWAN network server.
- **Over-the-air activation (OTAA):** Endpoints are allowed to dynamically join a particular LoRaWAN network after successfully going through a join procedure. The join procedure must be done every time a session context is renewed. During the join process, which involves the sending and receiving of MAC layer join request and join accept messages, the node establishes its credentials with a LoRaWAN network server, exchanging its globally unique DevEUI, AppEUI, and AppKey. The AppKey is then used to derive the session NwkSKey and AppSKey keys.

Competitive Technologies

LPWA solutions and technologies are split between unlicensed and licensed bands. The licensed-band technologies are dedicated to mobile service providers that have acquired spectrum licenses. In addition, several technologies are targeting the unlicensed-band LPWA market to compete against LoRaWAN. The LPWA market is quickly evolving. Table 2.3 evaluates two of the best-established vendors known to provide LPWA options.

Table 2.3 Unlicensed LPWA Technology Comparison

Characteristic	LoRaWAN	Sigfox	Ingenu Onramp
Frequency bands	433 MHz, 868 MHz, 902–928 MHz	433 MHz, 868 MHz, 902–928 MHz	2.4 GHz
Modulation	Chirp spread spectrum	Ultra-narrowband	DSSS
Topology	Star of stars	Star	Star; tree supported with an RPMA extender
Data rate	250 bps–50 kbps (868 MHz) 980 bps–21.9 kbps (915 MHz)	100 bps (868 MHz) 600 bps (915 MHz)	6 kbps
Adaptive data rate	Yes	No	No
Payload	59–230 bytes (868 MHz) 19–250 bytes (915 MHz)	12 bytes	6 bytes–10 KB
Two-way communications	Yes	Partial	Yes
Geolocation	Yes (LoRa GW version 2 reference design)	No	No
Roaming	Yes (LoRaWAN 1.1)	No	Yes
Specifications	LoRA Alliance	Proprietary	Proprietary